Engineering Connections

Watt Close, East Portway, Hants SP10 3TG
Tel +44(0)1264 350778 Fax +44(0)1264 334215
www.engdynamics.co.uk
info@engdynamics.co.uk

BULKHEAD SOCKET CONNECTORS

LOW TEMPERATURE (MAXIMUM 100°C)

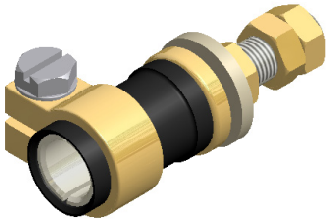

ED20-037
EQUIV TO FV39347
LOW TEMPERATURE

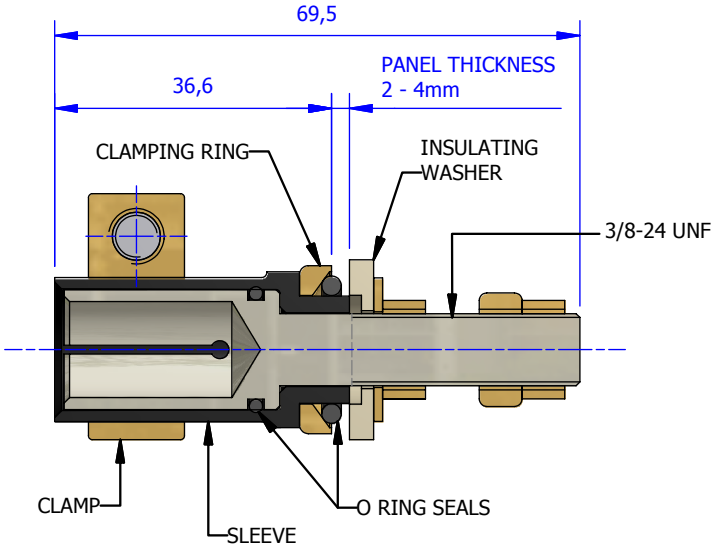

HIGH TEMPERATURE (MAXIMUM 200°C)

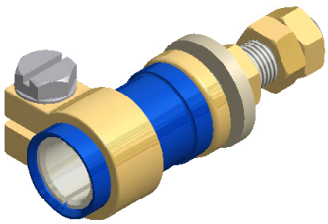

ED20-035
EQUIV TO FV892658
HIGH TEMPERATURE

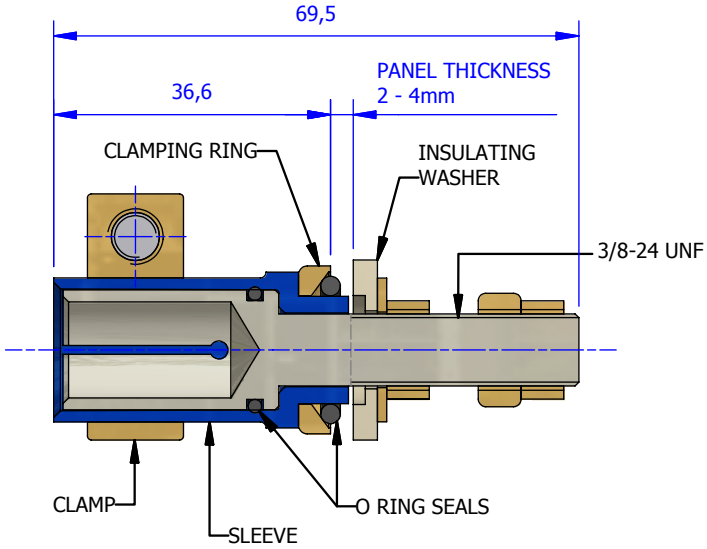

PANEL (BULKHEAD) THICKNESS 2 - 4mm
MOUNTING HOLE REQUIRED Ø14.3 $^{+0.2}_{-0}$

Engineering Connections are a selling company for Engineering Dynamics (Southern) Ltd
All connectors supplied are equivalent to the QRT FV range

COPYRIGHT © 2009 ENGINEERING DYNAMICS (SOUTHERN) LTD

Registered at Companies House Cardiff as Engineering Dynamics (Southern) LTD. Registration No 1517290
Registered Office: Parmenter House, 57 Tower Street, Winchester, Hants SO23 8TD