Engineering Connections

Watt Close, East Portway, Hants SP10 3TG
Tel +44(0)1264 350778 Fax +44(0)1264 334215
www.engdynamics.co.uk
info@engdynamics.co.uk

STRAIGHT PLUG CONNECTORS

LOW TEMPERATURE (MAXIMUM 100°C)

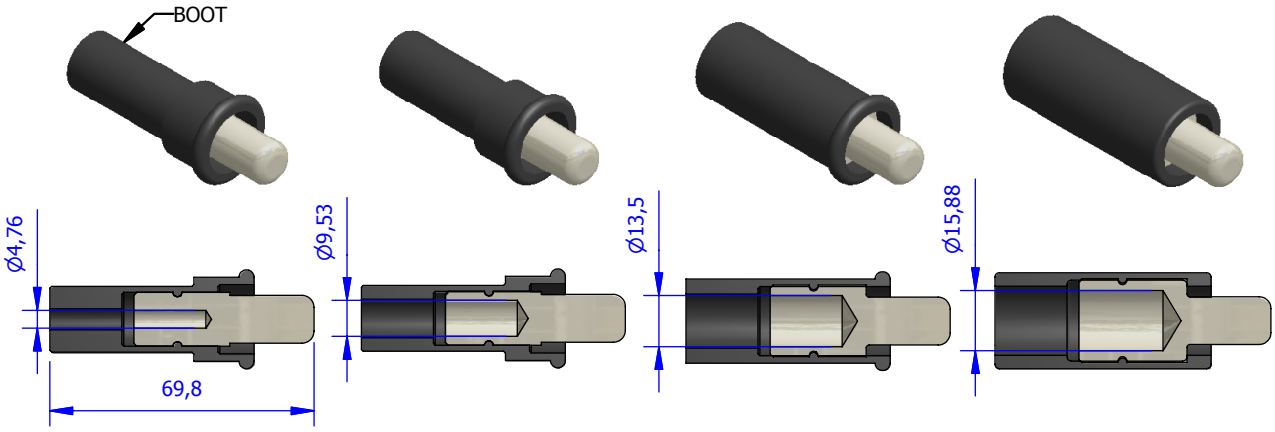

ED20-031
EQUIV TO FV892654
LOW TEMPERATURE
CABLE SIZE 8 AWG

ED20-032
EQUIV TO FV892655
LOW TEMPERATURE
CABLE SIZE 2 AWG

ED20-033
EQUIV TO FV892656
LOW TEMPERATURE
CABLE SIZE 00 AWG

ED20-034
EQUIV TO FV892657
LOW TEMPERATURE
CABLE SIZE 0000 AWG

HIGH TEMPERATURE (MAXIMUM 200°C)

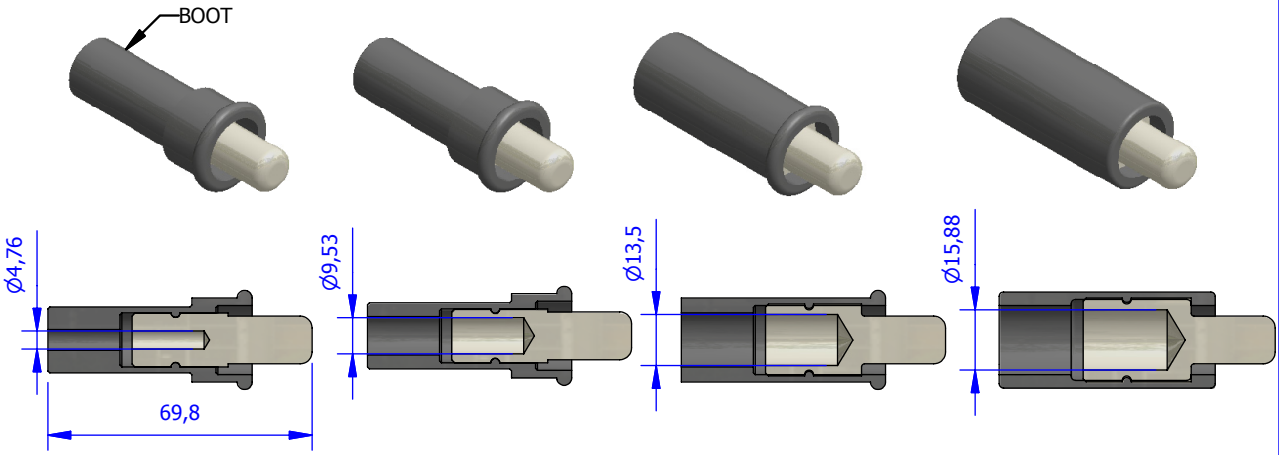

ED20-029
EQUIV TO FV892694
HIGH TEMPERATURE
CABLE SIZE 8 AWG

ED20-027
EQUIV TO FV892695
HIGH TEMPERATURE
CABLE SIZE 2 AWG

ED20-008
EQUIV TO FV892696
HIGH TEMPERATURE
CABLE SIZE 00 AWG

ED20-009
EQUIV TO FV892697
HIGH TEMPERATURE
CABLE SIZE 0000 AWG

Engineering Connections are a selling company for Engineering Dynamics (Southern) Ltd
All connectors supplied are equivalent to the QRT FV range

COPYRIGHT © 2009 ENGINEERING DYNAMICS (SOUTHERN) LTD

Registered at Companies House Cardiff as Engineering Dynamics (Southern) LTD. Registration No 1517290
Registered Office: Parmenter House, 57 Tower Street, Winchester, Hants SO23 8TD