Engineering Connections

Watt Close, East Portway, Hants SP10 3TG
Tel +44(0)1264 350778 Fax +44(0)1264 334215
www.engdynamics.co.uk
info@engdynamics.co.uk

ANGLED PLUG CONNECTORS

LOW TEMPERATURE (MAXIMUM 100°C)

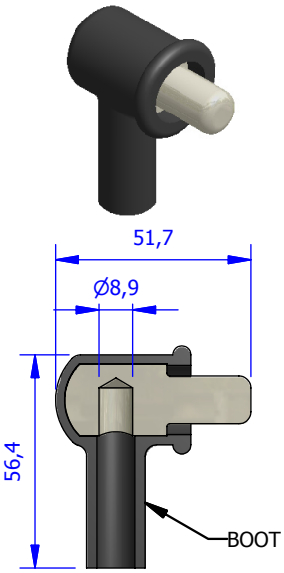

ED20-020
EQUIV TO FV292428
LOW TEMPERATURE
CABEL SIZE 2 AWG

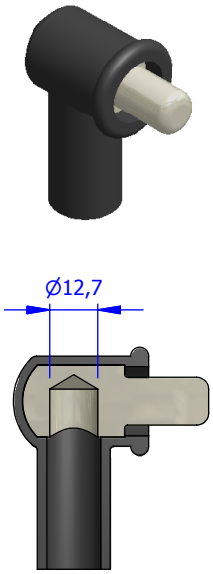

ED20-021
EQUIV TO FV292425
LOW TEMPERATURE
CABLE SIZE 00 AWG

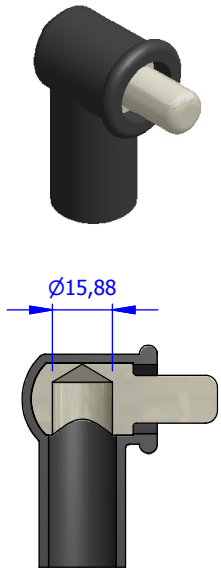

ED20-022
EQUIV TO FV292422
LOW TEMPERATURE
CABLE SIZE 0000 AWG

HIGH TEMPERATURE (MAXIMUM 200°C)

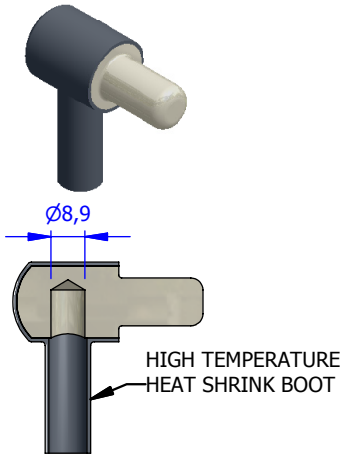

ED20-012
EQUIV TO FV892683
HIGH TEMPERATURE
CABLE SIZE 2 AWG

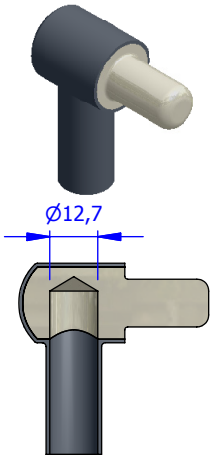

ED20-007
EQUIV TO FV892682
HIGH TEMPERATURE
CABLE SIZE 00 AWG

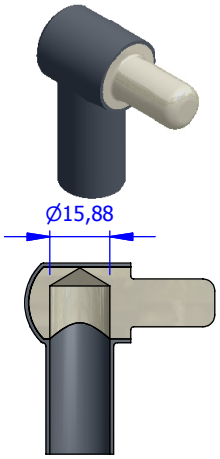

ED20-004
EQUIV TO FV892681
HIGH TEMPERATURE
CABLE SIZE 0000 AWG

Engineering Connections are a selling company for Engineering Dynamics (Southern) Ltd
All connectors supplied are equivalent to the QRT FV range

COPYRIGHT © 2009 ENGINEERING DYNAMICS (SOUTHERN) LTD
Registered at Companies House Cardiff as Engineering Dynamics (Southern) LTD. Registration No 1517290
Registered Office: Parmenter House, 57 Tower Street, Winchester, Hants SO23 8TD